U.S. PIPE | VALVE & HYDRANT DIVISION

A-USP2 Resilient Wedge Gate Valve

Form 12932 – 04/14

Product Features

- Non-Rising Stem (NRS).
- Meets AWWA C509.
- 2" square Operating Nut (optional Handwheel).
- 4" – 12" (DN100 – DN300).
- All Ductile Iron Body and Bonnet.
- Fusion Bonded Epoxy Coating – 10 mil (250µ) nominal, meets requirements of AWWA C550.
- Antifriction washer above and below thrust collar.
- 304 Stainless Steel, Bonnet and Stuffing Box Bolts and Nuts.
- Iron Wedge, symmetrical & fully encapsulated with molded rubber; no exposed iron – acetal Caps on guides ease operation and avoid wear.
- 10 year limited warranty.
- 250 psig (17 Barg) working pressure, 500 psig (34 Barg) test pressure.
- UL listed, FM approved.
- End connection: Flange ANSI B16.1 Class 125 Flat Face (optional PN10, PN16 drilling).

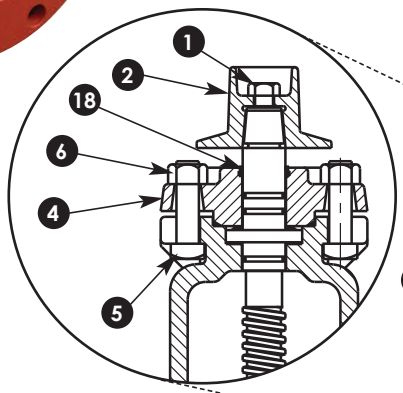

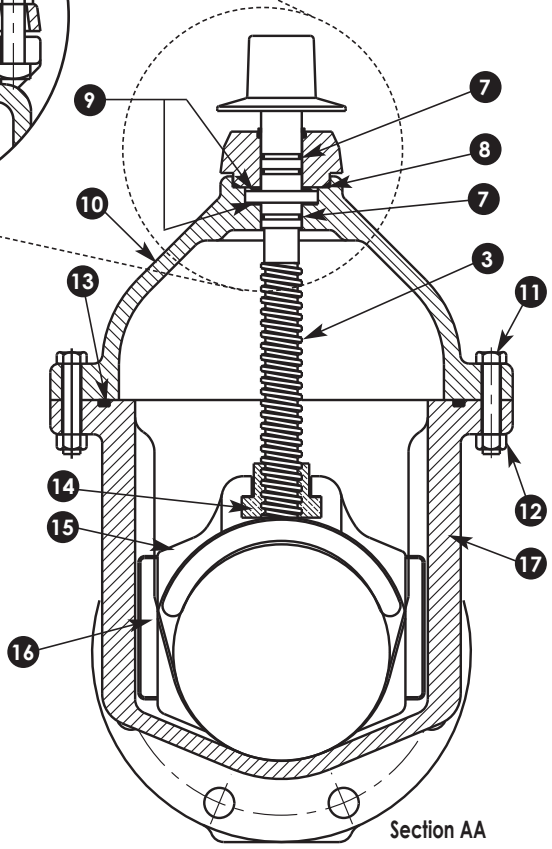

Parts List

ID	PART NAME	MATERIAL STANDARDS
1	Cap Screw	Stainless Steel Type 304
2	Wrench Nut	Cast Iron ASTM A126 CL B
3	Stem	Bronze ASTM B138 Alloy C67600 H04
4	Stuffing Box	Cast Iron ASTM A126 CL B
5	Stuffing Box Bolts	Stainless Steel Type 304
6	Stuffing Box Nuts	Stainless Steel Type 304
7	O-Ring	Nitrile ASTM D2000
8	O-Ring (Stuffing Box Area)	Nitrile ASTM D2000
9	Anti-Friction Washer	Acetal
10	Bonnet	Ductile Iron ASTM 536
11	Bonnet Bolts	Stainless Steel Type 304
12	Bonnet Nuts	Stainless Steel Type 304
13	Bonnet Gasket (O-Ring)	Nitrile ASTM D2000
14	Disc Nut	Bronze ASTM B62
15	Disc	See Note 1
16	Guide Cap	Acetal
17	Body-Flange Ends	Ductile Iron ASTM 536
18	Wiper Ring	Polyurethane

Note 1. SBR Rubber encapsulated cast iron disc. Cast iron – ASTM A-126 Class B. SBR ASTM D2000.

Mueller Co.
INTERNATIONAL DIVISION

moreinfo@muellercompany.com

Mueller International Division . 6125 Preservation Dr., Suite 200 . Chattanooga, TN 37416 . +1-423-490-9555 . FAX +1-423-531-0033

VALVE & HYDRANT DIVISION

A-USP2 Resilient Wedge Gate Valve

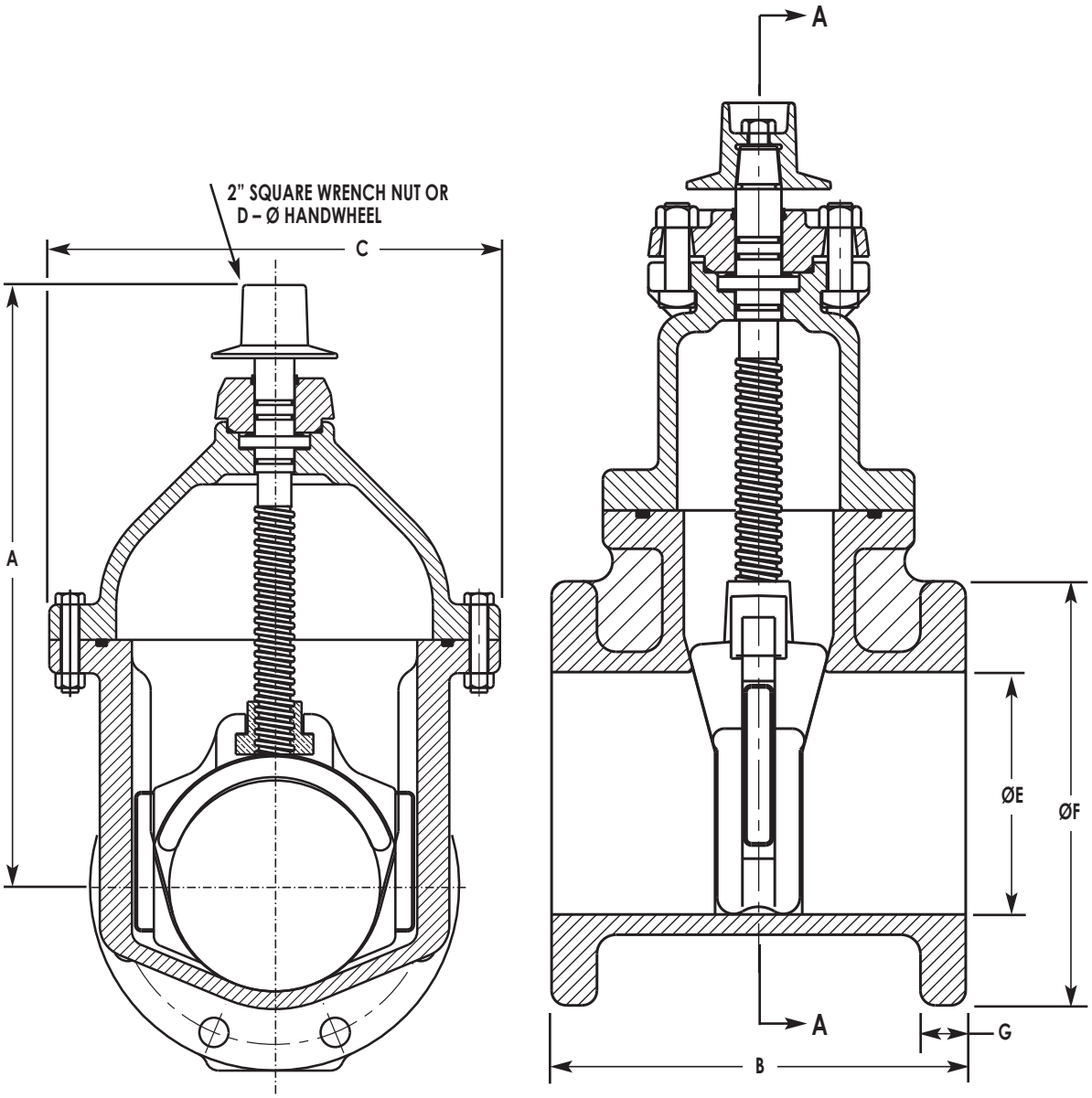

Dimensions – inches (mm)

VALVE SIZE	A	B	C*	ØD	ØE	ØF	G	Wt – lb (Kg)
4" (DN100)	14.19 (360)	9.00 (229)	10.79 (274)	11.00 (279)	4.30 (109)	9.00 (229)	0.94 (24)	98 (44)
6" (DN150)	18.00 (457)	10.50 (267)	13.50 (343)	13.00 (330)	6.30 (160)	11.00 (279)	1.06 (27)	153 (69)
8" (DN200)	21.50 (546)	11.50 (292)	16.36 (416)	14.00 (356)	8.30 (211)	13.50 (343)	1.19 (30)	246 (112)
10" (DN250)	25.50 (648)	13.00 (330)	19.99 (508)	16.00 (406)	10.30 (262)	16.00 (406)	1.25 (32)	392 (178)
12" (DN300)	28.62 (727)	14.00 (356)	21.00 (533)	16.00 (406)	12.30 (312)	19.00 (483)	1.31 (33)	522 (237)

*C dimension is the overall width of the bonnet flange viewed from the flanged end, which is not visible in this view of the drawing.

Copyright © 2014 Mueller Co., LLC. All Rights Reserved. The trademarks, logos and service marks displayed in this document herein are the property of Mueller Co., LLC, its affiliates or other third parties. These products are intended for use in potable water applications. Please contact your Mueller Sales or Customer Service Representative concerning any other application(s).

Mueller Co.
INTERNATIONAL DIVISION

Mueller International Division . 6125 Preservation Dr., Suite 200 . Chattanooga, TN 37416 . +1-423-490-9555 . FAX +1-423-531-0033