Pipe Repair Products

A complete selection for all types of pipe

Mueller Co.

Mueller® Service Saddles

Manufactured and tested in accordance with ANSI/AWWA C800 & NSF 61 certified.

Mueller service saddles, available in bronze and ductile iron, are used for making convenient, dependable service line connections on water mains. Different styles are available for use on virtually every type of pipe. All utilize an O-ring contained in a dimensionally controlled groove to eliminate creep and possible seal blowout.

For Ferrous Pipe

Mueller ductile iron or bronze saddles feature strap configurations and saddle body shapes that allow nearly 360° pipe contact for a strong grip that resists movement. Large wrench surfaces on the saddle's boss support tightening loads during corporation valve installation. Availability includes AWWA taper threads (CC) or AWWA IP threads in 3/4" through 2" tapping sizes.

Exclusive Ductile Iron Features (DR1 & DR2 Series)

- Rilsan Nylon 11 fluidized bed applied, 10-12 mil thick coating is standard — superior corrosion resistance, non-conductive, and unique capability to flex with saddle as it is tightened to conform to pipe OD.
- Low alloy, rolled steel straps are standard. Optional 304L stainless steel straps are available. Strap threads are rolled, rather than machine cut, for added strength and quick installation by allowing nuts to spin on easily.
- Washers are provided under each nut to protect the coating. Stainless steel washers and fluorocarbon-coated nuts are used with optional stainless steel strap.
- Thick tapping boss is precision-machined for pressure-tight connections that resist pull-out or breakage.
- Available for pipe sizes from 2" through 12" and 16" through 24".
- Maximum working pressures to 250 psig for single strap styles and 500 psig for double strap style.

Exclusive Bronze Features (BR1 & BR2 Series)

- Heavy bronze body provides high strength at critical stress points and corrosion resistance.
- Standard bronze straps are flattened to provide greater gripping surface. Optional 304L stainless steel straps are available. Strap threads are rolled for strength and quick installation by allowing nuts to spin on easily.
- Stainless steel washers and fluorocarbon-coated stainless steel nuts are used with optional stainless steel strap.
- Thick tapping boss is precision-machined for pressure-tight connections that resist pull-out or breakage.
- Available for pipe sizes from 4" through 12" for single strap styles and 4" through 24" for double strap styles.
- Maximum working pressure is 200 psig for both styles.

For PVC Pipe (H-13000 & S-13000 Series)

Mueller® service saddles are designed to provide reliable, pressure-tight connections and stability. Wide, specially shaped straps accurately fit the contour of the plastic pipe without distortion.

- Heavy bronze body for strength at critical stress points.
- Flat straps provide large gripping area, accurate fit for each pipe size.
- Thick tapping boss is precision-machined for pressure-tight connections that resist pull-out or breakage.
- Pressure on O-ring seal is balanced for more dependable sealing and better confinement of the seal in its groove to resist cold flow and creep.
- Available with either AWWA taper threads (CC) or AWWA IP threads in 3/4" through 2" tapping. Sizes for 2" through 12" O.D. controlled IPS plastic pipe and 4" through 12" AWWA C900 PVC pipe.
- Maximum working pressure is 200 psig.

Mueller service saddles are compatible with Mueller® drilling machines and corporation valves. The appropriate drilling machine with equipment for the size of connection and type of pipe makes it easy to drill the main through the open corporation valve.

Threads in the saddles are specially designed to slightly deform the threads on the corporation valve as it is tightened, providing a leak-tight seal.

Mueller® Tapping Sleeves & Pipe Couplings

NSF 61 certified and comply with ANSI B16.1 Class 125 drilling.

H-304 Series

Designed to provide corrosion resistance and high pressure sealing, Mueller stainless steel tapping sleeves are available with stainless steel, carbon steel or ductile iron flanges and are NSF 61 certified. They comply with ANSI B16.1 Class 125 drilling and have a machined centering recess for tapping valves in accordance with MSS-SP 60. A fully machined flange face allows precise alignment of the tapping valve and drilling machine. Sizes to fit IPS PVC, C900 cast iron O.D. PVC, cast iron and ductile iron pipe.

- The 304L stainless steel is low carbon to minimize carbide precipitation corrosion and fully passivated to maintain corrosion resistance.
- All welds are continuous bead, by robotic MIG welders for consistent quality.
- Side bars are extra heavy gauge for maximum bending resistance. Larger sizes include gussets for added strength.
- “Waffle” design gasket, saddle gasket with outlet seal, along with integral gap bridging, provides an optimal watertight seal.
- Brass 3/4” NPT test plug with a square head for easy removal is standard; stainless steel optional.
- Carbon steel and ductile iron flanges coated with water-based enamel for corrosion resistance; stainless steel optional.
- Sizes from 4”x4” to 24”x12”; FL or integral MJ outlets.
- Maximum working pressures to 250 psig (4”-12”) and 200 psig (14”-24”).

Iron Tapping Sleeves and Crosses

Mueller offers a full range of NSF 61 and Annex G certified mechanical joint tapping sleeves and crosses to fit most types of pipe, including cast iron, ductile iron, A-C and cast iron O.D. PVC. Outlet sealed tapping sleeves for C900 O.D. PVC, Ductile Iron, and Cast Iron pipe are also available.

- All sleeves have outlet flanges with dimensions and drilling that comply with ANSI B16.1 Class 125 and MSS-SP 60.
- Black water-based paint is standard; Mueller HP Epoxy Coating optional (standard on T-28). A-C sleeves are coated with orange primer.
- Sizes range from 4”x4” to 24”x24”.
- Maximum working pressure to 250 psig for all sizes 4”-24”.

Maxi-Range™ Pipe Coupling

Mueller Maxi-Range Pipe Couplings connect any two pieces of pipe of similar nominal size without disassembly, or adapting end rings or transition gaskets. The coupling interior and exterior has a fluidized bed applied Rilsan® Nylon 11 coating. Using Mueller Maxi-Range Couplings saves time and reduces inventory.

- Cor-Ten® track head bolts with flash zinc coating and anti-spin feature, 304 stainless steel optional.
- SBR gaskets seal over a wide range of pipe O.D. and exterior surface conditions.
- Accommodates ±5 degrees of pipe deflection.
- Sizes from 2” through 12”.
- Maximum working pressure to 250 psig.

Mueller® Stainless Steel Repair Clamps

304L stainless steel repair clamps for all types of pipe repair problems.

Mueller offers a full line of high efficiency 304L stainless steel repair clamps for all types of pipe repair problems. They are used to repair holes, leaks, splits, circumferential breaks and cracks, as well as to correct pulled or leaking service connections. Stainless steel clamps can be installed above or below ground and are available for all types of pipe, with styles especially suited for use in “hot” soils or corrosive atmospheres.

230 Series Mini-Band™ Clamps

For uniform, 360 degree sealing of pinholes, punctures, splits and small abrasions on small diameter rigid pipe.

- Gasket fully encircles the pipe to provide a uniform circumferential seal.
- Integral stainless steel gap bridges are recessed and bonded to the gasket.
- Drop-in style ductile iron lugs assist in ensuring uniform clamping force.
- Zinc-plated steel bolt has rolled spin-fit threads to speed installation; stainless steel optional.
- Compact design allows installation in tight spaces.
- Sizes for 1/2” through 2” rigid copper, steel or PVC pipe in 3”, 6”, 9”, 12”, 15”, and 18” lengths.
- Maximum working pressure to 150 psig on steel or copper pipe; 60 psig on PVC.

200 Series Pipe-Saver® Clamps

For fast, efficient, low cost repair of holes and splits in steel pipe.

- Zinc-plated steel bolt has rolled spin-fit threads to speed installation; stainless steel optional.
- Drop-in style ductile iron lug bars are shaped to distribute clamping pressure uniformly on pipe surface.
- Gaskets available with smooth or gridded surface. Separate cone gasket is available to close holes or deep pits.
- Sizes for 1/2” through 8” standard steel pipe in single section; 10” through 24” pipe in two sections.
- 350 psig maximum working pressure 1/2”-4”; 200 psig 6”-8”; 150 psig 10”-12”; 100 psig 14”-16”; 60 psig 18”-24”.

NOTE: Mueller Pipe Repair Clamps have demonstrated the ability to seal against water pressures commonly encountered in distribution systems. Smaller diameter clamps of a given design can seal against higher pressures than larger ones. In addition, the pressure that a clamp can contain is affected by the torque applied to the bolts, the uniformity of bolt tightening (when there is more than one bolt), as well as the type and extent of pipe damage, surface condition of the pipe and installation workmanship.

Non-standard sizes of all styles of repair clamps are available upon request.

Mueller® Stainless Steel Repair Clamps

NSF 61 certified.

500/510 Series

High efficiency clamps offer long life in most soils and atmospheres. Available in single-section Full Seal® style (500 Series), two-section Xtra Range® style (510 Series) and Servi-Seal® style with welded-in service outlet in both single and double section. Each clamp size can accommodate a wide range of O.D. variations.

- Designed for optimum length and the most efficient gasket load per square inch, allowing effective sealing to within 1” of either clamp edge. Standard lengths from 6” to 30”.
- Exclusive Mueller lug design of lightweight, strong ductile iron is E-coated as a rust inhibitor. Drop-in style lugs are self-aligning to provide uniform transfer tightening force along the full clamp length. They locate pulling force close to the pipe surface for easy tightening without bolt bending.
- Corrosion-resistant alloy steel lug bolts and nuts have service life expectancies compatible with the rest of your system; stainless steel optional.
- Captive bolts have deep, non-galling, spin-fit threads. Heavy shoulders prevent turning in lug, and heavy hex nuts provide more thread contact for strength.
- Extra long “starter” bolt and nut on each lug eases installation.
- Stainless steel gap bridges, recessed and molded into the gasket where band sections join, add support to provide 360 degree clamping pressure.
- Specially compounded rubber gasket has a gridded pattern for positive sealing. Tapered ends make installation quick and easy.
- Optional bonding device is available to maintain electrical continuity across clamp band.
- Optional add-on feature allows clamps to be joined over a longer than normal pipe length.
- Sizes from 2” to 12” (4” to 36” 510 Series).
- Maximum working pressure: 300 psig for 500 Series 2”-8” and 200 psig 10” & 12” (300 psig 510 Series 4”-8”, 200 psig 10” & 12”, and 150 psig 14”-36”).

520/530 Series

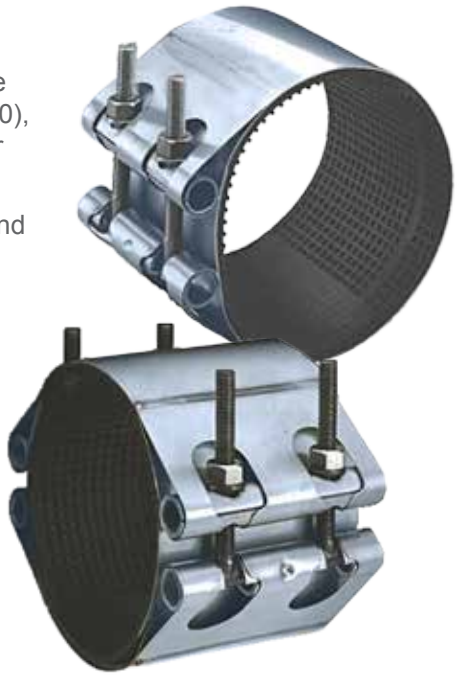

Lightweight all stainless steel clamps resist corrosive atmospheres and hot soils. Available in single-section Full-Seal® style (Series 520), in two-section Xtra-Range® style (Series 530), and in Servi-Seal® style with welded-in service outlet. Servi-Seal style is available in either single-section (Styles 521-529) or two-section (Styles 531- 539).

- 304L stainless steel “Gap Bridges” molded into gasket where the band sections join and add support to provide 360° clamping pressure.
- Tapered end gridded gasket made of specially compounded nitrile rubber has gridded pattern for positive sealing and tapered ends to make installation quick and easy.
- Specially compounded rubber gasket has a gridded pattern for positive sealing. Tapered ends make installation quick and easy.
- Stainless steel bands are machine-welded and made of 304L stainless steel
- Bolting mechanism features a unique low profile design, which makes clamp easy to handle and easy to fit around pipe.
- The high-strength stainless steel bolts have spin-fit threads, treated with an anti-galling agent for fast installation – plus special T-heads so they drop into bolt bar slots easily yet do not turn during tightening.
- Stainless steel bolting mechanism is pre-assembled. Unique weight-saving Mueller design features lug and bolt bars which rotate as the clamp is tightened.
- Maximum working pressure: 2”-8” 100 psig (689 kPa), 10”-12” cast iron pipe 60 psig, 10”-12” steel pipe 100 psig (689 kPa)

540/550 Series

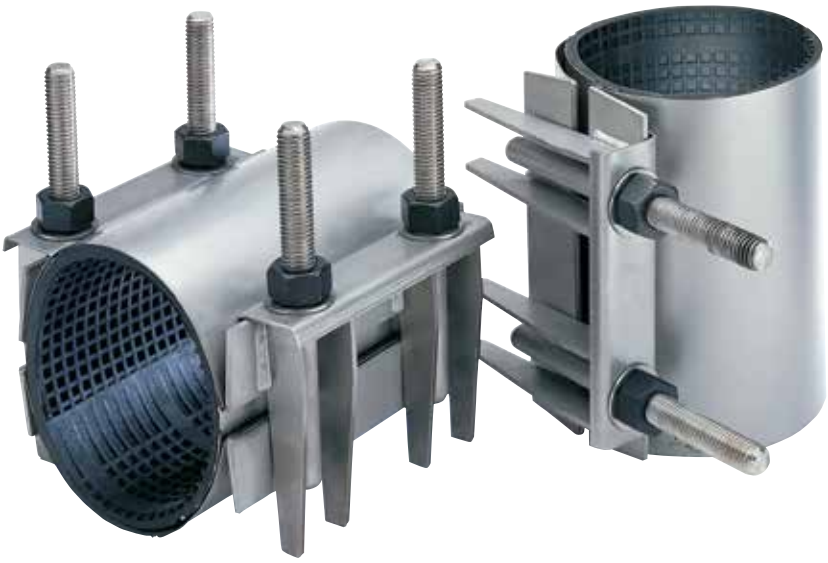

Lightweight, finger-lug design, Mueller® all stainless steel clamps resist corrosive atmospheres and hot soils. Available in single-section Full Seal® style (540 Series), two-section Xtra Range® style (550 Series) and Servi-Seal® style with welded-in service outlet in both single and double section. Each clamp size can accommodate a wide range of O.D. variations.

- Stainless steel bands are machine-welded.
- Standard lengths from 7-1/2" to 30".
- High strength stainless steel bolts have spin-fit threads treated with an anti-galling agent.
- Specially compounded rubber gasket has a gridded pattern for positive sealing. Tapered ends make installation quick and easy.
- Stainless steel gap bridges, recessed and molded into the gasket where band sections join, add support to provide 360 degree clamping pressure.
- Optional bonding device is available to maintain electrical continuity across clamp band.
- Optional add-on feature allows clamps to be joined over a longer than normal pipe length.
- Sizes from 2" to 12" (3" to 24" 550 Series).
- Maximum working pressure: 150 psig for 540 Series; (300 psig 550 Series 3”-8”, 150 psig 10” & 12”).

773 Series

The 773 Series Clamp is designed specifically for use on PE-160 PVC pipe solvent weld joints. It has a special stepped gasket that fits over the joint to stop leaks. The 773 Series resembles the 500 Series in most respects — it is a single-section style with ductile iron lugs.

- Sizes for 2” to 8” PVC pipe.
- 2” clamps are available in 6” or 7-1/2” lengths.
- 2-1/2” to 8” clamps are available in 7-1/2” or 12” lengths.
- Maximum working pressure is 150 psig.

NOTE: Mueller Pipe Repair Clamps have demonstrated the ability to seal against water pressures commonly encountered in distribution systems. Smaller diameter clamps of a given design can seal against higher pressures than larger ones. In addition, the pressure that a clamp can contain is affected by the torque applied to the bolts, the uniformity of bolt tightening (when there is more than one bolt), as well as the type and extent of pipe damage, surface condition of the pipe and installation workmanship.

Non-standard sizes of all styles of repair clamps are available upon request.

Our Products

Mueller has built its reputation on producing innovative water distribution products of superior quality – a reputation that is literally “on the line” every day throughout the world. Mueller products and those of its affiliates are used throughout the water system from the source to the consumer. We are committed to continuing research and development of new products and services to meet the growing needs of the water infrastructure industry. Mueller is the largest and only full-line supplier of potable water distribution products in North America and its markets continue to expand globally.

Our People

The capacity to deliver the widest array of products and stand behind those products to ensure your satisfaction is our strength. The success of Mueller is dependent upon the success of those who are involved, both inside and outside our company. Therefore, we feel our future is wholly dependent on long-term relationships with our employees, customers and suppliers. This is why we strive to be proactive and responsive to their needs, always looking for a “better way”. It’s an approach that has set us apart since 1857 and will assure our mutual achievement and prosperity in the future.

For more information about Mueller or to view Mueller’s full line of water products, please visit www.muellercompany.com or call Mueller Customer Service at 1.800.423.1323.

Follow Us:

Other Innovative Mueller Products

Remote Pressure Monitoring

§

Pressure management in pipe networks are fundamental to providing safe drinking water. The loss of pressure can allow ground water to contaminate the distribution system. Fluctuations in pressure can affect the physical integrity of pipes. Surges in pressure have been known to create additional leaks, main breaks and/or dramatically reduce infrastructure life. Pressure management can also save money. Accurate pressure data allows system operators to reduce leakage volumes, energy costs, system maintenance costs, customer complaints, and water quality problems.

- Reduce unaccounted for (non-revenue) water (NRW)
- Identify potential infrastructure failures related to pressure fluctuations which can lead to significant repair costs.
- Improve pump management and reduce energy costs
- Improve public safety

Mueller Co. LLC
633 Chestnut St., Suite 1200
Chattanooga, TN 37450
www.muellercompany.com

Toll Free: 1.800.423.1323
Canada: 1.705.719.9965
moreinfo@muellercompany.com

Copyright © 2016 Mueller Co., LLC. All Rights Reserved.
The trademarks, logos and service marks displayed in this document herein are the property of Mueller Co., LLC, its affiliates or other third parties. Products above marked with a section symbol (§) are subject to patents or patent applications. For details, visit www.mwppat.com. These products are intended for use in potable water applications. Please contact your Mueller Sales or Customer Service Representative concerning any other application(s).

Form 12168 - Rev 1/16